Model: M125-V8-GB-S-3

GBIC 850nm VCSEL 3.3V/ 5V Transceiver



FEATURES

- Dual Power Supply +5V and +3.3 V
- TTL Loss of Signal Output
- Compliant with specification for IEEE802.3Z/D2
- Multi-Mode Fiber, SC Duplex Interface
- Class 1 Laser International Safety Standard IEC 825 Compliant
- Low power consumption
- Hot-pluggable
- Temperature Ranges: 0℃ to +70℃

DESCRIPTION

General

The transceiver from Wamin Optocomm is compliant with IEEE802.3Z/D2 and the Gigabit Interface Converters (GBIC) Multi-Source Agreement (MSA). This upgrade, and reliability benefits by virtue of being hot-pluggable and operates at a nominal wavelength of 850nm with high performance.

Transmitter Section

The transmitter consists of a high-performance 850 nm Vertical Cavity Surface Emitting Laser (VCSEL) in the optical subassembly (OSA). In addition, this component is also class 1 laser compliant with according to International Safety Standard IEC- 60825-2.

Receiver Section

The receiver contain of a GaAs PIN photodiode coupled to a high sensitivity transimpedance amplifier (TIA) in an OSA. This OSA combination is mated to a quantizer IC that provides the post amplification, signal detection, and TTL logic high state output when a usable input optical signal level is detected.

APPLICATIONS

- ATM switch, SONET / SDH Network
- Bridges/Routers/intelligent hub and concentrators
- Gigabit Ethernet / Fiber Channel

Shanghai Wamin Optocomm Mfg. Corporation
TEL:8621-52190451,52190143,52191404 FAX: 8621-52191472
Web-Site:Http://wamin.com.cn E_mail: sales@wamin.com.cn

Model: M125-V8-GB-S-3

SPECIFICATION SHEET

Transmitter	Electrical Characteristics				
Parameter	**Symbol**	**Min**	**Type**	**Max**	**Unit**
Transmit Disable Voltage	V_D	Vcc – 1.3		Vcc	V
Transmit Enable Voltage	V_{EN}	Vee		Vee+0.8	V
Optical Characteristics					
Parameter	**Symbol**	**Min**	**Type**	**Max**	**Unit**
Output Optical Power	P_{OUT}	-9.5		-3	dBm
Extinction Ratio	Ext	9			dB
Center Wavelength		770		860	nm
Spectral Width				0.85	nm
Optical Rise Time/Fall Time(20%-80%)	T_r/T_f			0.26	ns
Relative Intensity Noise	RIN	-117			dB/Hz
Receiver	**Electrical Characteristics**				
Parameter	**Symbol**	**Min**	**Type**	**Max**	**Unit**
Data output rise time (20%-80%)	t_r			0.4	ns
Data output fall time (20%-80%)	t_f			0.4	ns
Optical Characteristics					
Parameter	**Symbol**	**Min**	**Type**	**Max**	**Unit**
Optical Input Power - Maximum	Rx_{Max}	-3			dBm
Receiver Sensitivity	Rx_{SENS}			-17	dBm
Return Loss		12			dB
Signal Detect - Deasserted	P_D	-30			dBm
Signal Detect - Asserted	P_A			-18	dBm
Signal Detect - Hysteresis	$P_A - P_D$	0.5		5	dB

Recommended Operating Condition					
Parameter	**Symbol**	**Min**	**Type**	**Max**	**Unit**
Supply Voltage	Vcc	3.15		5.25	V
Supply Current (ITX +IRX)	Icc		135	300	mA

Absolute Maximum Ratings					
Parameter	**Symbol**	**Min**	**Type**	**Max**	**Unit**
Supply Voltage	Vcc	-0.5		6.0	V
Storage Temperature	Ts	-40		85	℃
General Specifications				260/10	℃/s

Shanghai Wamin Optocomm Mfg. Corporation
TEL:8621-52190451,52190143,52191404 FAX: 8621-52191472
Web-Site:Http://wamin.com.cn E_mail: sales@wamin.com.cn

Model: M125-V8-GB-S-3

GBIC to host connector pin assignment

Pin Name	Pin#	Sequence	Sequence	Pin#	Pin Name
RX_LOS	1	2	1	11	RGND
RGND	2	2	1	12	-RX_DAT
RGND	3	2	1	13	+RX_DAT
MOD_DEF(0)	4	2	1	14	RGND
MOD_DEF(1)	5	2	2	15	VDDR
MOD_DEF(2)	6	2	2	16	VDDT
TX_DISABLE	7	2	1	17	TGND
TGND	8	2	1	18	+TX_DAT
TGND	9	2	1	19	-TX_DAT
TX_FAULT	10	2	1	20	TGND

OVERVIEW OF INTERNAL INTERFACE SIGNAL

Pin Name	Pin#	Name/Function	Signal Specification
Receiver Signals			
RGND	2,3,11,14	Receiver Ground (may be connected with TGND in GBIC)	Ground, to GBIC
VDDR	15	Receiver +3.3 volt (may be connected with VDDT in GBIC)	Power, to GBIC
-RX_DAT	12	Receive Data, Differential PECL	High speed serial, from GBIC
+RX_DAT	13	Receive Data, Differential PECL	High speed serial, from GBIC
RX_LOS	1	Receiver Loss of Signal, logic high, open collector compatible, 4.7 K to 10 K Ohm pull up to VDDT on host	Low speed, from GBIC
Transmitter Signals			
TGND	8,9,17,20	Transmitter (may be connected with RGND internally)	Ground, to GBIC
VDDT	16	Transmitter +3.3 volt(may be connected with VDDR in GBIC)	Power, to GBIC
+TX_DAT	18	Transmit Data, Differential PECL	High speed serial, to GBIC
-TX_DAT	19	Transmit Data, Differential PECL	High speed serial, to GBIC
TX_DISABLE	7	Transmitter Disable, logic high, open collector compatible, 4.7 K to 10 K Ohm pull up to VDDT on GBIC	Low speed, to GBIC
TX_FAULT	10	Transmitter Fault, logic high, open collector compatible,4.7 K to 10 K Ohm pull up to VDDT on host	Low speed, from GBIC
Control Signals			
MOD_DEF(0)	4	GBIC module definition and presence, bit 0, 4.7 K to 10K Ohm pull up to VDDT on host	Low speed, from GBIC
MOD_DEF(1)	5	GBIC module definition and presence, bit 1, 4.7 K to 10K Ohm pull up to VDDT on host	Low speed, from GBIC
MOD_DEF(2)	6	GBIC module definition and presence, bit 2, 4.7 K to 10K Ohm pull up to VDDT on host	Low speed, from GBIC

Shanghai Wamin Optocomm Mfg. Corporation
TEL:8621-52190451,52190143,52191404 FAX: 8621-52191472
Web-Site:Http://wamin.com.cn E_mail: sales@wamin.com.cn

Model: M125-V8-GB-S-3

PACKAGE OUTLINE DRAWING

Dimension (unit:mm)

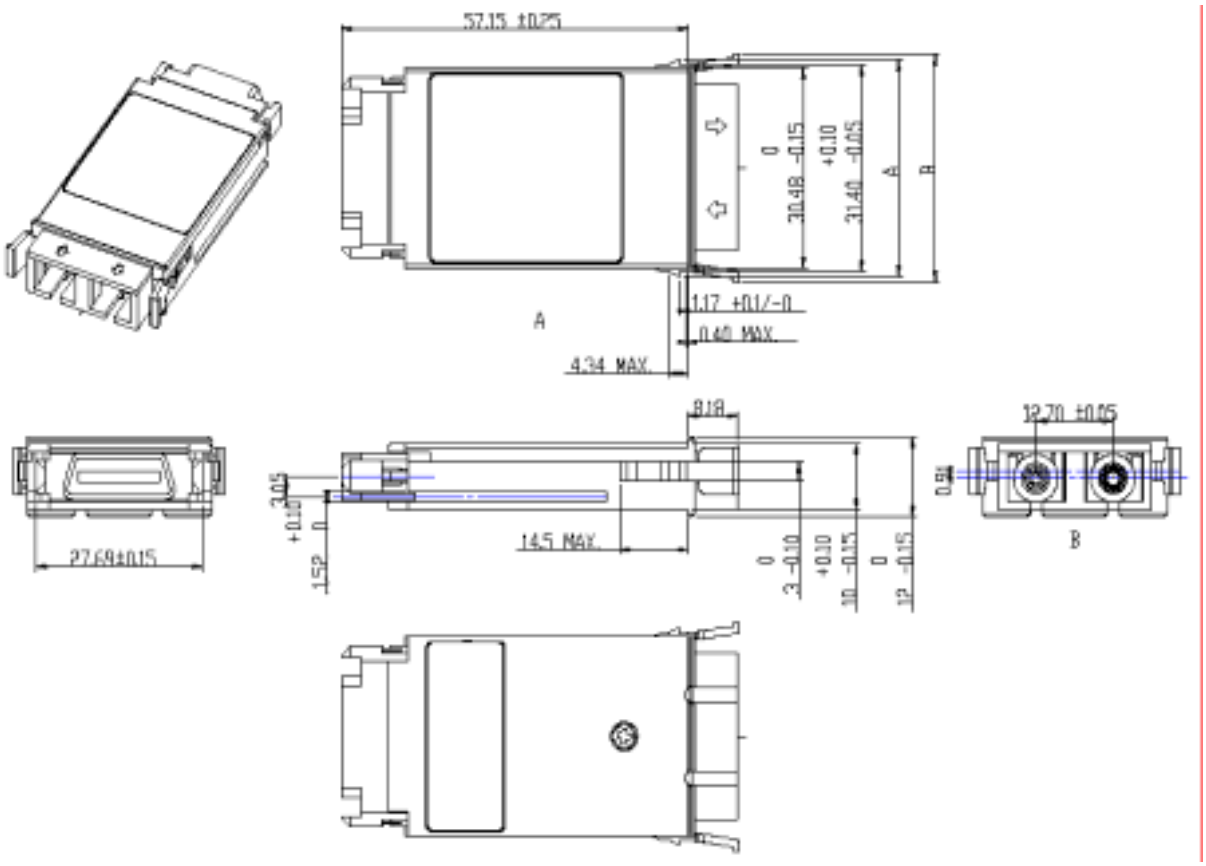

Shanghai Wamin Optocomm Mfg. Corporation
TEL:8621-52190451,52190143,52191404 FAX: 8621-52191472
Web-Site:Http://wamin.com.cn E_mail: sales@wamin.com.cn

Model: M125-V8-GB-S-3

RECOMMENDED CIRCUIT SCHEMATIC

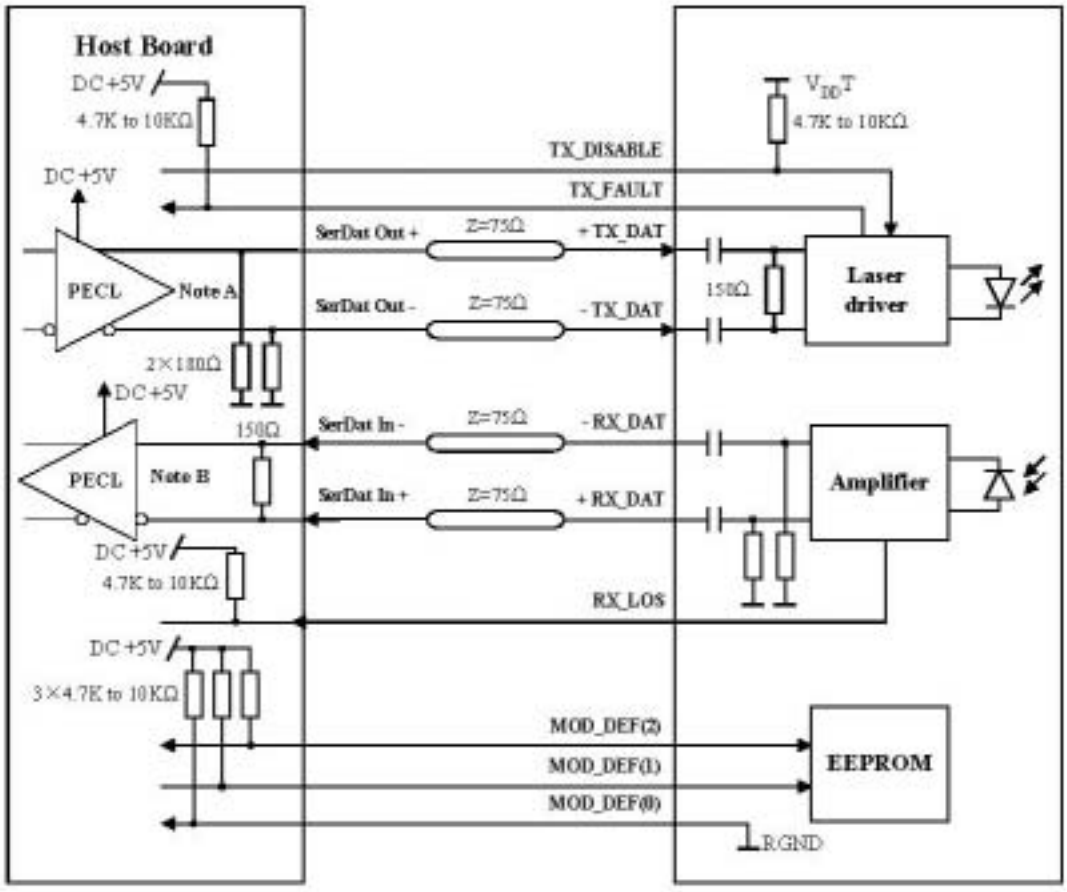

LASER SAFETY

This single mode transceiver is a Class1 laser product. It complies with IEC 825 and FDA 21 CFR 1040.10 and 1040.11.The transceiver must be operated within the specified temperature and voltage limits. The optical ports of the module shall determinate with an optical connector or with a dust plug.

Shanghai Wamin Optocomm Mfg. Corporation
TEL:8621-52190451,52190143,52191404 FAX: 8621-52191472
Web-Site:Http://wamin.com.cn E_mail: sales@wamin.com.cn